emotion for professional people

# modular emotion

-

700
900

en

modular

# emotion for professional people

Modular has created something more than other classic professional kitchens, a product able to respond to your needs of power, reliability and elegance. High productivity, high quality materials, reliability, safety and the best Italian design make the new Emotion Line the perfect kitchen for you.

modular

# it's not just cooking

## high quality

high thickness pressed
stainless steel worktops,
AISI 304 1,5 mm/2 mm/3 mm

## grids

high thickness
cast iron grids

emotion for professional people

# modularity

-

700
900

## top version

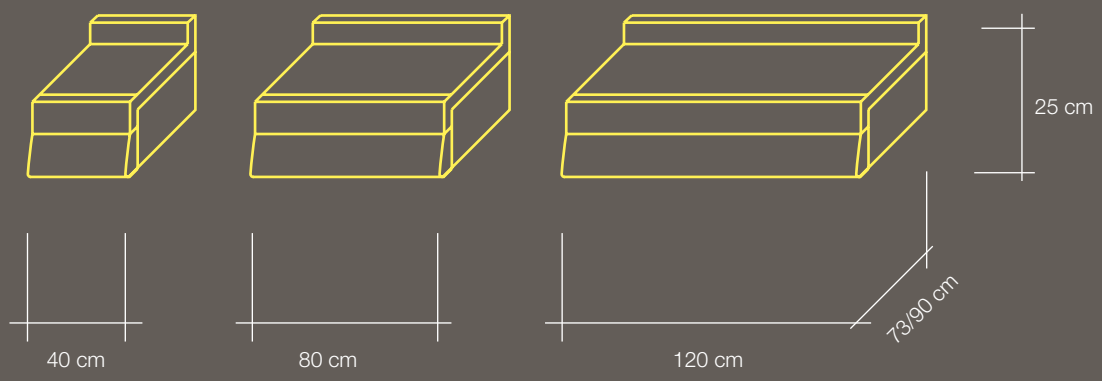

**side-by-side joining system with screws**

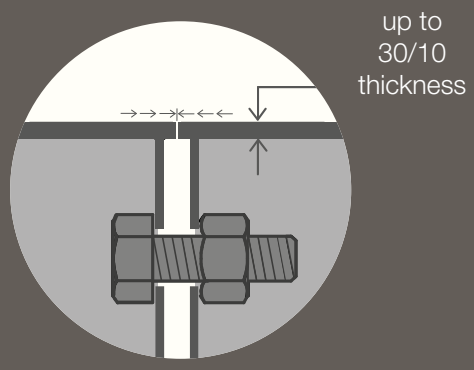


## version on cabinet

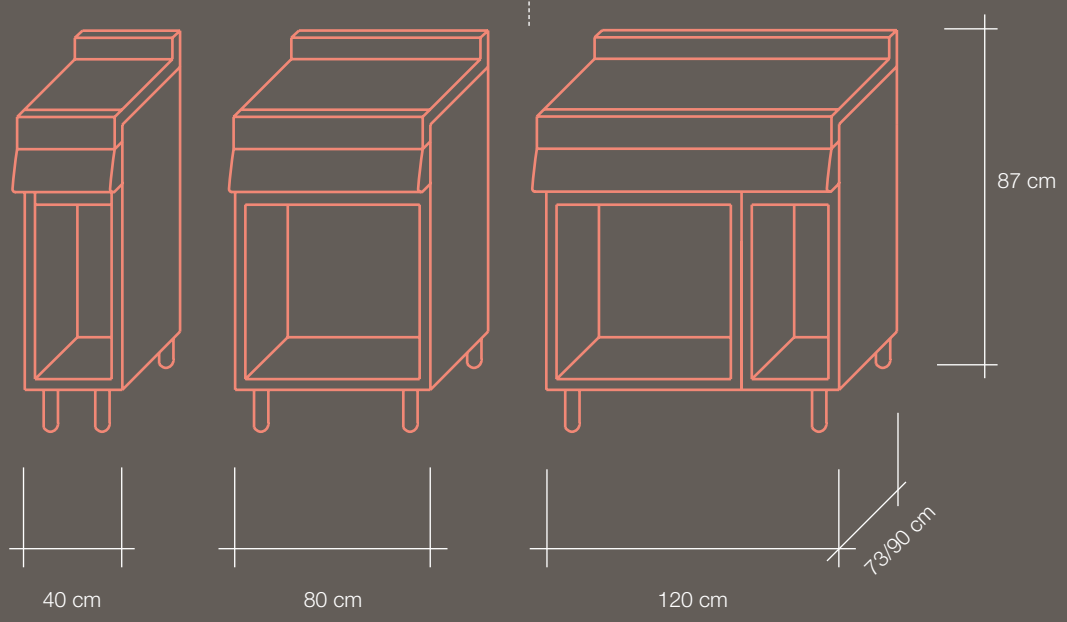


modular

# tailored to you
# simple or extreme?
# just be yourself

**extreme**
high power,
hygiene,
design

**simple**
same power,
same design,
small differences

modular

# the modular kitchen elements

modular

emotion for professional people

# gas ranges

## gas ranges

Emotion open burners models are available in many different versions with 2,4,6 or 8 burners in top version, on cabinet or on static oven.

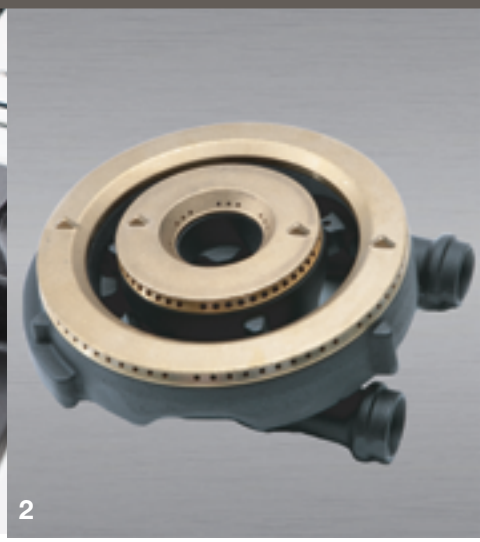

*1*
*Cast iron burners and brass flame spreaders, single crown 3,5 kW and double crown 6 - 7,5* and 10* kW, pan grids easy to remove and dishwashable. (*only for 900 series)*

*2*
*There are available some new special models with triple crown burners, dual control, 16 kW*

*3*
*Pressed worktop: 3 mm thick 900 series 2 or 1,5 mm thick 700 series.*

*4*
*Oven chamber made of stainless steel with 3 levels GN 2/1 rack. Oven inner door in stainless steel with pressed labyrinth sealing.*

modular

## gas ranges
## elements

2 burners

4 burners

6 burners

8 burners
*(only for 900 series)*

## simple, extreme or special power?

simple: single crown burners
*(only for 700 series)*

extreme: cast iron burners and brass flame spreaders, double crown.

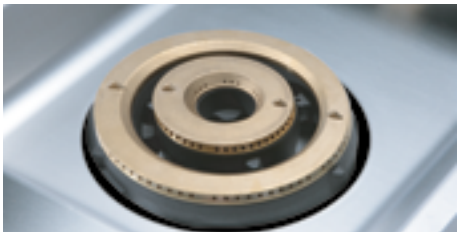

special power: new special models with triple crown burners, dual control, 16 kW

modular

700

# gas ranges

| | picture | model | description | dimensions (cm) | power of burners (kW) | gas oven power (kW) | electric oven power (kW) | total gas power (kW) | total electric power (kW) | supply voltage |
|---|---|---|---|---|---|---|---|---|---|---|
| *extreme* | | **EM 70/40 PCG-P** | Gas range, 2 burners | 40x73x87 h | 1x6<br>1x3,5 | - | - | 9,5 | - | - |
| | | **EM 70/80 PCG-P** | Gas range, 4 burners | 80x73x87 h | 3x6<br>1x3,5 | - | - | 21,5 | - | - |
| | | **EM 70/120 PCG-P** | Gas range, 6 burners | 120x73x87 h | 5x6<br>1x3,5 | - | - | 33,5 | - | - |
| | | **EM 70/80 CFG** | Gas range, 4 burners, gas oven | 80x73x87 h | 3x6<br>1x3,5 | 8 | - | 29,5 | - | - |
| | | **EM 70/80 CFGE** | Gas range, 4 burners, electric oven | 80x73x87 h | 3x6<br>1x3,5 | - | 6 | 21,5 | 6 | 380-415V<br>3N 50-60Hz |
| | | **EM 70/120 CFG** | Gas range, 6 burners, gas oven | 120x73x87 h | 5x6<br>1x3,5 | 8 | - | 41,5 | - | - |
| | | **EM 70/120 CFGE** | Gas range, 6 burners, electric oven | 120x73x87 h | 5x6<br>1x3,5 | - | 6 | 33,5 | 6 | 380-415V<br>3N 50-60Hz |
| | | **EM 70/120 CFGG** | Gas range, 6 burners, gas oven maxi | 120x73x87 h | 5x6<br>1x3,5 | 10 | - | 43,5 | - | - |
| *simple* | | **EM 70/40 PCGS-P** | Gas range simple version, 2 burners | 40x73x87 h | 1x6<br>1x3,5 | - | - | 9,5 | - | - |
| | | **EM 70/80 PCGS-P** | Gas range simple version, 4 burners | 80x73x87 h | 3x6<br>1x3,5 | - | - | 21,5 | - | - |
| | | **EM 70/80 CFGS** | Gas range simple version, 4 burners, gas oven | 80x73x87 h | 3x6<br>1x3,5 | 8 | - | 29,5 | - | - |
| | | **EM 70/80 CFGES** | Gas range simple version, 4 burners, electric oven | 80x73x87 h | 3x6<br>1x3,5 | - | 6 | 21,5 | 6 | 380-415V<br>3N 50-60Hz |
| *special power* | | **EM 70/40 PCGJ-P** | Gas range, 1 burner | 40x73x87 h | 1x16 | - | - | 16 | - | - |

All models are available in top version and open cabinet.

900

# gas ranges

| picture | model | description | dimensions (cm) | power of burners (kW) | gas oven power (kW) | electric oven power (kW) | total gas power (kW) | total electric power (kW) | supply voltage |
|---|---|---|---|---|---|---|---|---|---|
| | **EM 90/40 PCG-P** | Gas range, 2 burners | 40x90x87 h | 1x10<br>1x6 | - | - | 16 | - | - |
| | **EM 90/80 PCG-P** | Gas range, 4 burners | 80x90x87 h | 3x10<br>1x6 | - | - | 36 | - | - |
| | **EM 90/120 PCG-P** | Gas range, 6 burners | 120x90x87 h | 4x10<br>2x6 | - | - | 52 | - | - |
| | **EM 90/80 CFG** | Gas range, 4 burners,<br>gas oven | 80x90x87 h | 3x10<br>1x6 | 8 | - | 44 | - | - |
| | **EM 90/80 CFGE** | Gas range, 4 burners,<br>electric oven | 80x90x87 h | 3x10<br>1x6 | - | 6 | 36 | 6 | 380-415V<br>3N 50-60Hz |
| | **EM 90/80 CFGEV** | Gas range, 4 burners,<br>electric convection oven | 80x90x87 h | 3x10<br>1x6 | - | 6 | 36 | 6 | 380-415V<br>3N 50-60Hz |
| | **EM 90/120 CFG** | Gas range, 6 burners,<br>gas oven | 120x90x87 h | 4x10<br>2x6 | 8 | - | 60 | - | - |
| | **EM 90/120 CFGE** | Gas range, 6 burners,<br>electric oven | 120x90x87 h | 4x10<br>2x6 | - | 6 | 52 | 6 | 380-415V<br>3N 50-60Hz |
| | **EM 90/120 CFGEV** | Gas range, 6 burners,<br>electric convection oven | 120x90x87 h | 4x10<br>2x6 | - | 6 | 52 | 6 | 380-415V<br>3N 50-60Hz |
| | **EM 90/120 CFGG** | Gas range, 6 burners,<br>gas oven maxi | 120x90x87 h | 4x10<br>2x6 | 12 | - | 64 | - | - |
| | **EM 90/160 CFG** | Gas range, 8 burners,<br>gas oven | 160x90x87 h | 6x10<br>2x6 | 8+8 | - | 88 | - | - |
| | **EM 90/160 CFGE** | Gas range, 8 burners,<br>electric convection oven | 160x90x87 h | 6x10<br>2x6 | - | 6+6 | 72 | 12 | 380-415V<br>3N 50-60Hz |
| | **EM 90/40 WOKG** | Gas wok | 40x90x87 h | 1x25 | - | - | 25 | - | - |

*special power*

| | | | | | | | | | |
|---|---|---|---|---|---|---|---|---|---|
| | **EM 90/40 PCGJ-P** | Gas range, 2 burners | 40x90x87 h | 1x16<br>1x6 | - | - | 22 | - | - |
| | **EM 90/80 PCGJ-P** | Gas range, 4 burners | 80x90x87 h | 2x16<br>2x6 | - | - | 44 | - | |
| | **EM 90/80 CFGJ** | Gas range, 4 burners, gas oven | 80x90x87 h | 2x16<br>2x6 | 8 | - | 52 | - | - |

All models are available in top version and open cabinet.

modular