emotion for professional people

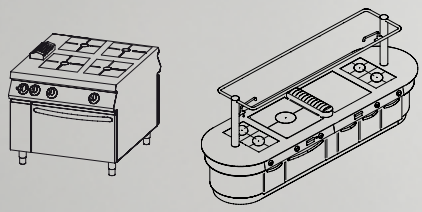

modular cooking sensation

–

1100
cooking islands

en

modular

discover the new sensation cooking lines

A kitchen made up of modular equipment, which takes up minimal space, guaranteeing at the same time best quality and high performance, and satisfying even the most demanding professional people in the sector. Modularity makes this series versatile and functional in the organization of space. Its features, as robustness, reliability, ergonomics and high quality of raw materials, will be able to gain the confidence of the most demanding customers.

modular

it's not just cooking

A luxury series for the most demanding chefs
Among modular cooking series, **Sensation 1100** shines for its design, style and reliability. Modularity, wide range of functions and double controls allow to mix different appiances and guarantee the best use of space.

Accessibility and ergonomics
A cooking island for the most renowned kitchens, easily accessible on both sides for intensive services.

Ergonomic working top and knobs guarantee the comfort of the chef and the entire brigade.

Style and elegance in every detail
The design of Sensation 1100 is detectable in all its constructive aspects: knobs, handles, chimneys are all designed to satisfy the visual pleasure of the finest professionals.

modular cooking

>sensation

luxury

emotion

high performance, technology, heavy duty

pratika

professional, easy, simple, adaptable

function

space-saving, user-friendly

modular

modular cooking sensation

–

1100

modular

modular

1100

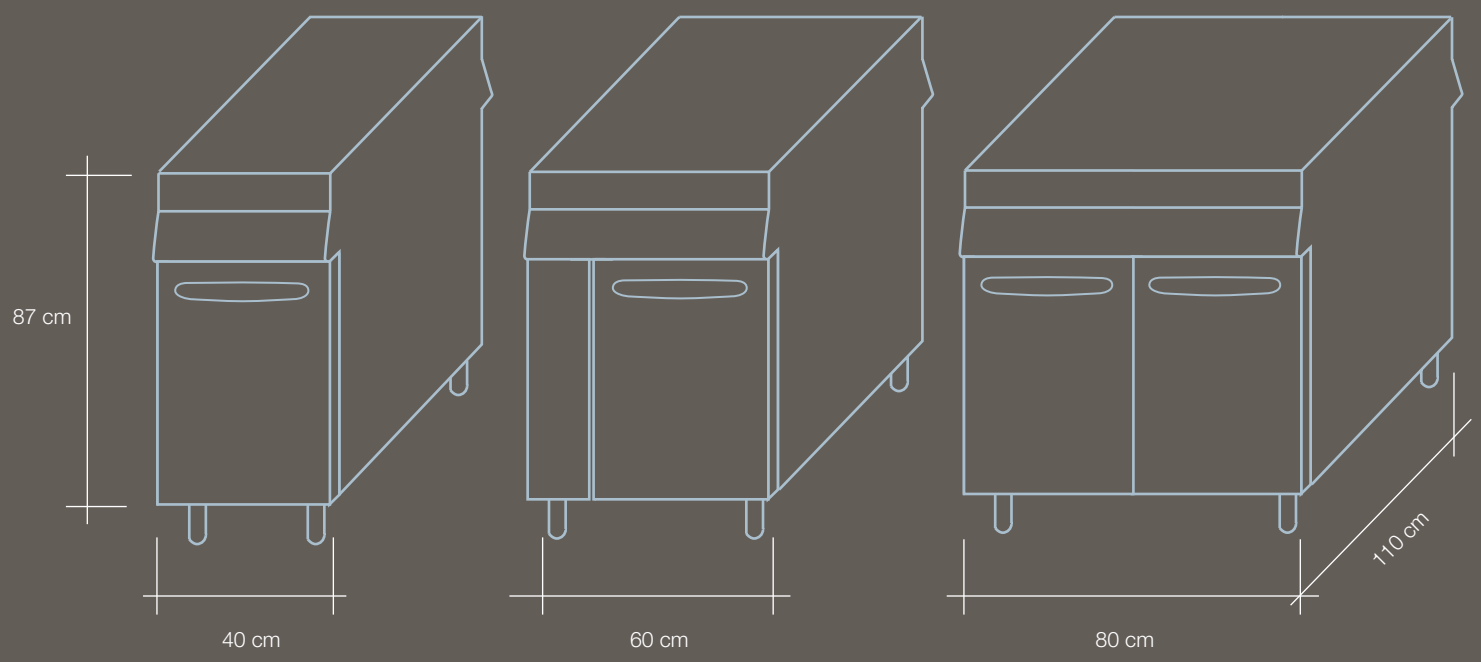

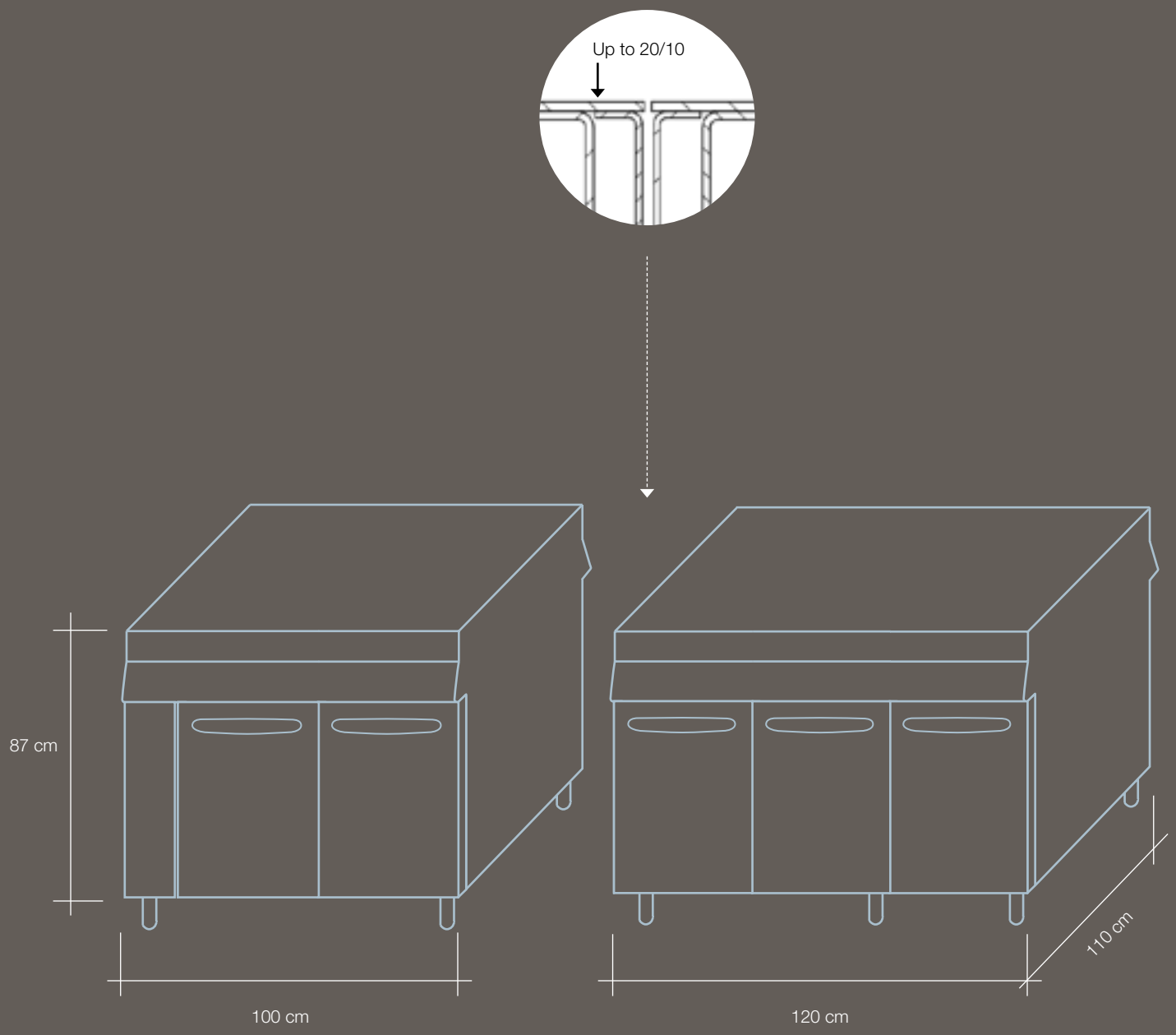

modular

emotion for professional people

gasherde and solid tops

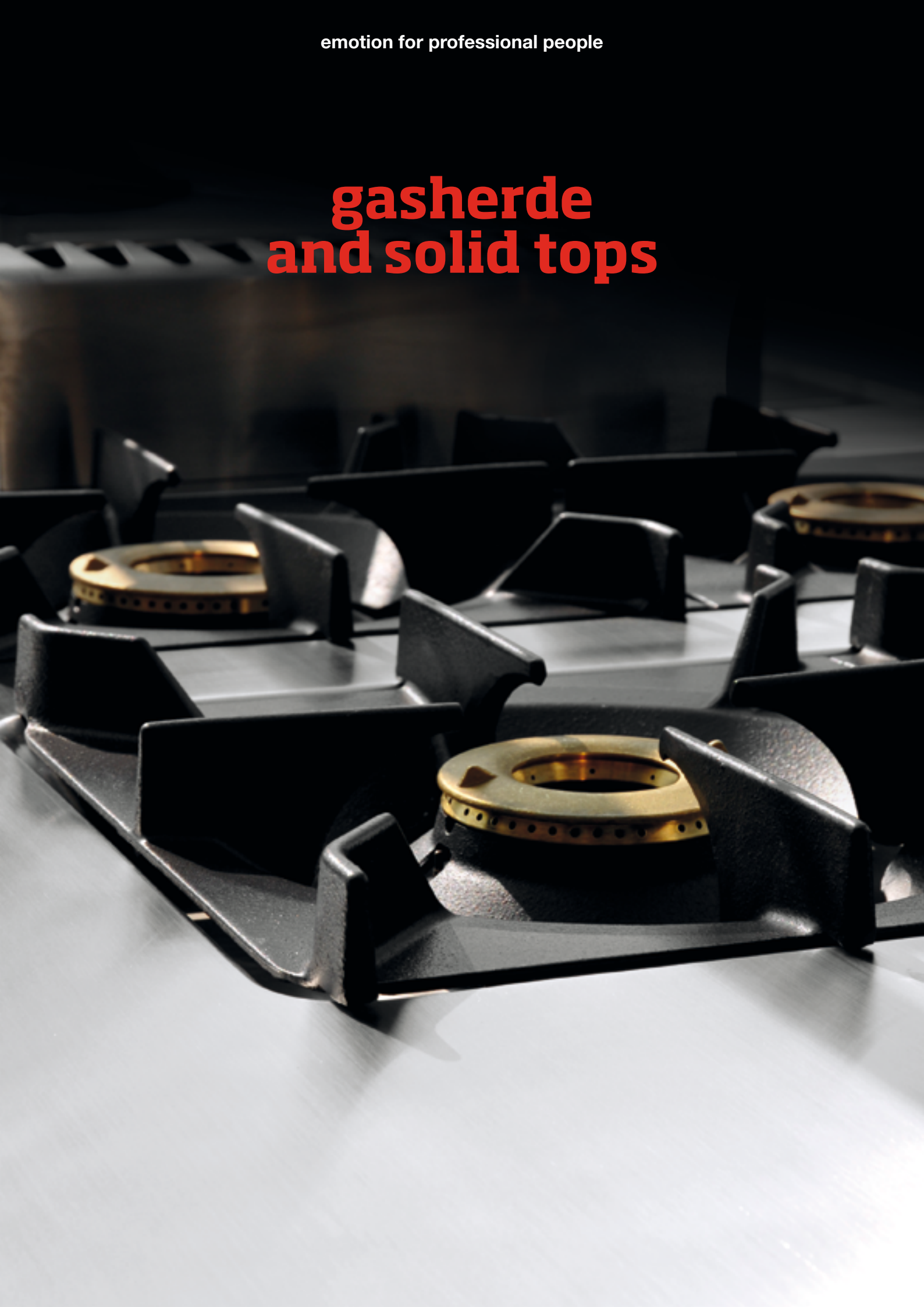

gas ranges

picture	model	description	dimensions (cm)	power of burners (kW)	gas oven power (kW)	electric oven power (kW)	total gas power (kW)	total electric power (kW)	supply voltage
	SE 110/40 PCGBI	Gas range, 2 burners, two-sided panel control	40x110x87 h	1x5,5 1x7,5	-	-	13	-	-
	SE 110/80 PCGBI	Gas range, 4 burners, two-sided panel control	80x110x87 h	2x5,5 2x7,5	-	-	26	-	-
	SE 110/120 PCGBI	Gas range, 6 burners, two-sided panel control	120x110x87 h	3x5,5 3x7,5	-	-	39	-	-
	SE 110/100 CFGBI	Gas range 4 burners, gas oven, two-sided panel control	100x110x87 h	2x5,5 2x7,5	10	-	36	-	-
	SE 110/100 CFGEBI	Gas range 6 burners, gas oven, two-sided panel control	100x110x87 h	2x5,5 2x7,5	10	-	26	9	-

gas solid tops

	SE 110/100 TPG	Gas solid top, two-sided panel control	100x110x87 h	1x12	-	-	12	-	-
	SE 110/100 TPFG	Gas solid top, gas oven, two-sided panel control	100x110x87 h	1x12	10	-	22	-	-

modular

emotion for professional people

Elektroherds and solid tops

electric ranges

picture	model	description	dimensions (cm)	power of plates/ zones (kW)	electric oven power (kW)	total electric power (kW)	supply voltage
	SE 110/60 PCE	Electric range, 2 square plates, on cabinet with door, two-sided panel control	60x110x87 h	2x4	-	8	380-415V 3N 50-60Hz
	SE 110/100 PCE	Electric range, 4 square plates, on cabinet with doors, two-sided panel control	100x110x87 h	4x4	-	16	380-415V 3N 50-60Hz
	SE 110/100 CFE	Electric range, 4 square plates, on electric oven, two-sided panel control	100x110x87 h	4x4	9	25	380-415V 3N 50-60Hz

electric solid tops

	SE 110/100 TPE	Electric solid top, 4 cooking zones, on cabinet with doors, two-sided panel control	100x110x87 h	4x3,4	-	13,6	380-415V 3N 50-60Hz
	SE 110/100 TPFE	Electric solid top, 4 cooking zones, on electric oven, two-sided panel control	100x110x87 h	4x3,4	9	22,6	380-415V 3N 50-60Hz

modular

emotion for professional people

induction and glass-ceramic plates

ceramic plates

picture	model	description	dimensions (cm)	power of burners (kW)	electric oven power (kW)	total electric power (kW)	supply voltage
	SE 110/60 PVE	Ceramic plate on cabinet with door, 2 cooking zones, two-sided panel control	60x110x87 h	2x3,4	-	6,8	380-415V 3N 50-60Hz
	SE 110/100 PVE	Ceramic plate on cabinet with doors, 4 cooking zones, two-sided panel control	100x110x87 h	4x3,4	-	13,6	380-415V 3N 50-60Hz
	SE 110/100 CFVE	Ceramic plate, 4 cooking zones, electric oven, two-sided panel control	100x100x87 h	4x3,4	9	22,6	380-415V 3N 50-60Hz

induction plates

	SE 110/60 IND	Induction plate, on cabinet with door, two-sided panel control	60x110x87 h	2x5	-	10	380-415V 3N 50-60Hz
	SE 110/100 IND	Induction plate, on cabinet with doors, two-sided panel control	100x110x87 h	4x5	-	20	380-415V 3N 50-60Hz
	SE 110/60 INDW	Induction wok, on cabinet with door	60x110x87 h	1x5	-	5	380-415V 3N 50-60Hz

modular

emotion for professional people

pasta cookers and bain maries

pasta cookers

picture	model	description	dimensions (cm)	gas oven power (kW)	total electric power (kW)	supply voltage
	SE 110/60 CPGS	Gas pasta cooker, 1 well, capacity 40 L	60x110x87 h	11,8	-	-
	SE 110/60 CPES	Electric pasta cooker, 1 well, capacity 40 L	60x110x87 h	-	9	380-415V 3N 50-60Hz

bain maries

	SE 110/40 BME	Electric bain marie, 1 container GN 1/1+1/3, on cabinet with door	40x110x87 h	-	2,2	220-240V 1N 50-60Hz
	SE 110/80 BME	Electric bain marie, 2 containers GN 1/1, on cabinet with doors	80x110x87 h	-	4,4	380-415V 3N 50-60Hz

modular

emotion for professional people

griddles

griddles

picture	model	description	dimensions (cm)	total gas power (kW)	total electric power (kW)	supply voltage
	SE 110/100 FTGS	Gas griddle, smooth plate on cabinet with doors, two-sided panel control	100X110X87 h	14	-	-
	SE 110/100 FTGS-CR	Gas griddle, smooth chromed plate on cabinet with doors, two-sided panel control	100X110X87 h	21	-	-
	SE 110/100 FTES	Electric griddle, smooth plate on cabinet with doors, two-sided panel control	100X110X87 h	-	15	380-415V 3N 50-60Hz
	SE 110/100 FTES-CR	Electric griddle, smooth chromed plate on cabinet with doors, two-sided panel control	100X110X87 h	-	15	380-415V 3N 50-60Hz
	SE 110/100 FTRGS	Gas griddle, 1/2 smooth 1/2 ribbed plate on cabinet with doors, two-sided panel control	100X110X87 h	14	-	-
	SE 110/100 FTRGS-CR	Gas griddle, 1/2 smooth 1/2 ribbed chromed plate on cabinet with doors, two-sided panel control	100X110X87 h	21	-	-
	SE 110/100 FTRES	Electric griddle, 1/2 smooth 1/2 ribbed plate on cabinet with doors, two-sided panel control	100X110X87 h	-	15	380-415V 3N 50-60Hz
	SE 110/100 FTRES-CR	Electric griddle, 1/2 smooth 1/2 ribbed chromed plate on cabinet with doors, two-sided panel control	100X110X87 h	-	15	380-415V 3N 50-60Hz

modular

emotion for professional people

fryers

fryers

picture	model	description	dimensions (cm)	total gas power (kW)	total electric power (kW)	supply voltage
	SE 110/40 FRGS13 PW	Gas fryer, 1 well, 13 L capacity	40x110x87 h	12	-	-
	SE 110/80 FRGS13 PW	Gas fryer, 2 wells, 13+13 L capacity	80x110x87 h	24	-	-
	SE 110/40 FRGS22 PW	Gas fryer, 1 well, 20 L capacity	40x110x87 h	20	-	-
	SE 110/80 FRGS22 PW	Gas fryer, 2 wells, 20+20 L capacity	80x110x87 h	40	-	-
	SE 110/40 FRE8+8	Electric fryer, 1 well, 8+8 L capacity	40x110x87 h	-	14	380-415V 3N 50-60Hz
	SE 110/40 FRE13	Electric fryer, 1 well, 13 L capacity	40x110x87 h	-	12	380-415V 3N 50-60Hz
	SE 110/80 FRE13	Electric fryer, 1 well, 13+13 L capacity	80x110x87 h	-	24	380-415V 3N 50-60Hz
	SE 110/40 FRE17	Electric fryer, 1 well, 17 L capacity	40x110x87 h	-	16,5	380-415V 3N 50-60Hz
	SE 110/80 FRE17	Electric fryer, 1 well, 17+17 L capacity	80x110x87 h	-	33	380-415V 3N 50-60Hz
	SE 110/40 FRE21	Electric fryer, 1 well, 21 L capacity	40x110x87 h	-	20	380-415V 3N 50-60Hz
	SE 110/80 FRE21	Electric fryer, 1 well, 21+21 L capacity	80x110x87 h	-	40	380-415V 3N 50-60Hz

modular

emotion for professional people

grills
tilting bratt pans
neultral elements

	picture	model	description	dimensions (cm)	total gas power (kW)	total electric power (kW)	supply voltage
grills		**SE 110/80 GRACQG**	Electric aqua grill, cooking zone in cast iron, meat/fish (4 x SE 110/80 GGACQ included)	40x70x85 h	22	-	380-415V 3N 50-60Hz
		SE 110/80 GRACQE	Electric aqua grill, cooking zone in cast iron, meat/fish (4 x SE 110/80 GGACQ included)	70x70x85 h	-	15	380-415V 3N 50-60Hz
bratt pans		**SE 110/40 BMFE**	Electric multi-function bratt pan on cabinet with door, capacity 13 L	40x110x87 h	-	6,6	380-415V 3N 50-60Hz
		SE 110/80 BMFE	Electric multi-function bratt pan on cabinet with door, capacity 29 L	40x110x87 h	-	13,2	380-415V 3N 50-60Hz
neultral units		**SE 110/40 PL**	Neutral unit on cabinet with door	40x110x87 h	-	-	-
		SE 110/40 PLC	Neutral unit with 1 drawer on cabinet with door	40x110x87 h	-	-	-

modular

modular cooking sensation islands

–

Designed around you

Like a haute couture dress or a painting, Modular produces its works of art: cooking islands.
Heavy-duty ranges, brilliant, versatile, but above all uniques! They hold all technical and working possibilities to meet even the most demanding needs.

Top in AISI 304 Up to 40/10

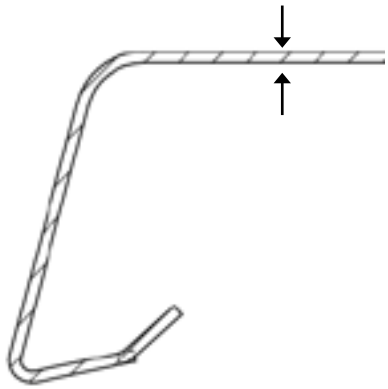

modular

emotion for professional people

excellent materials

Entirely made of AISI 304 stainless steel, the pressed worktops can be 30/10 or 40/10 thickness, starting from the classic shapes up to the most complex ones.

all you need

The modularity can change from 1500 mm up to 4000 width and from 1100, 1550 mm up to 1800 mm depth. Wall versions are also available in 770 mm or 900 mm depth.

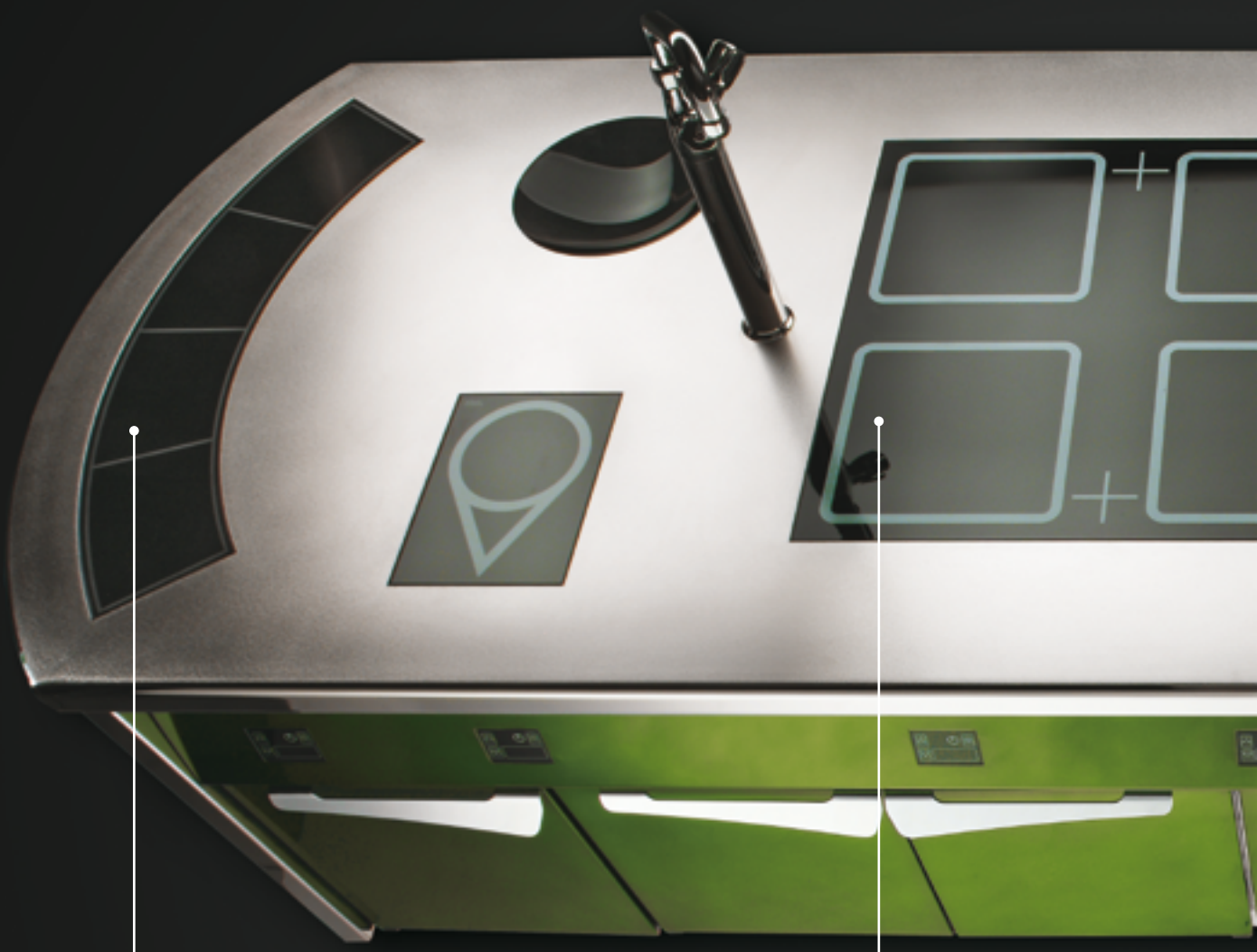

warm top

induction solid top

chromed griddle

molded sink

any colour on request

modular

model & measure

dimensions

picture	model	length (cm)	width (cm)	height (cm)
	Isola del Tesoro	1.000-4.000	1.000-1.200	900
	Essential	1.000-4.000	1.500-1.800	900
	Evolution	1.000-4.000	1.000-1.200	900
	Bridge	1.000-4.000	1.500-1.800	900
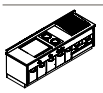	**Wall**	1.000-4.000	750-5700 900-5.900	900

* Different dimensions on request

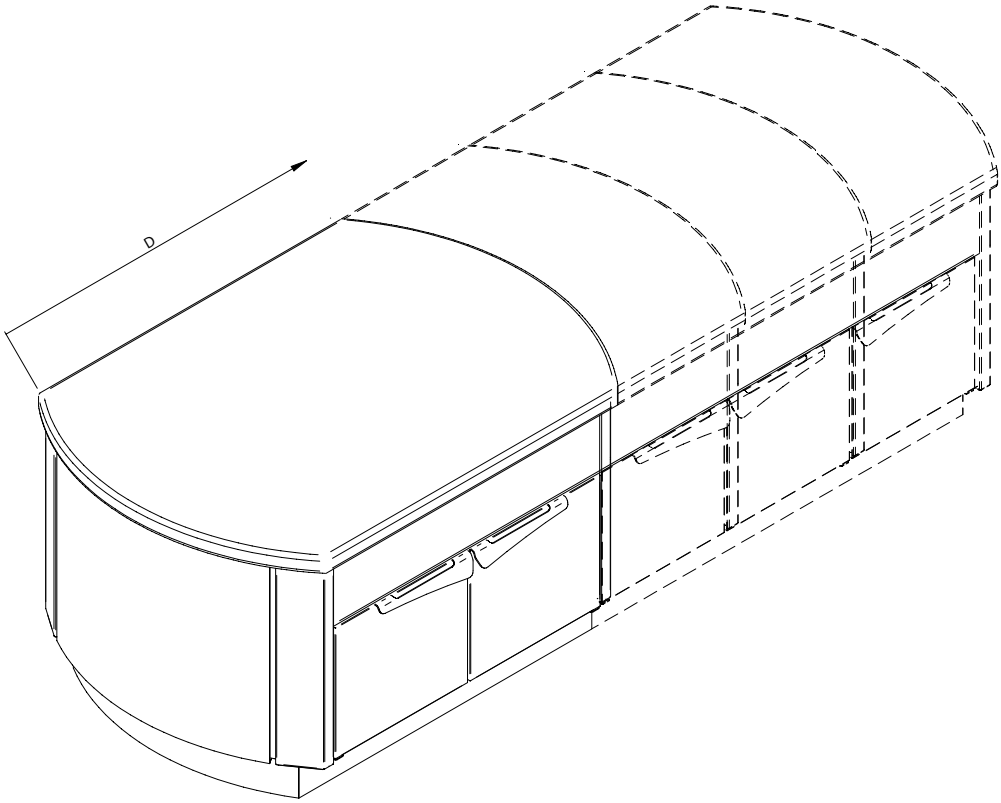

modular

The equipment combination
and position are up to the chef,
and only after a meticulous technical
analysis, we will submit you
a first drawing to evaluate different
solutions and find together the most
suitable for you.

The pressed control panels allow you
to have a single surface and therefore
a hygienic equipment.

The whole inner structure is reinforced
by steel supports.
The cabinets have H2 inner rounded
corners, the soundproof doors are
equipped with door stop at 100°
and return spring.

Every detail is developed according
to your liking and planned with our
technicians to offer
you an effectively unique product.

modular

pick & mix

equipment combination

equipment	Isola del Tesoro	Essential	Evolution	Bridge	Wall
Gas range with or without oven	✓	✓	✓	✓	✓
Gas solid top	✓	✓	✓	✓	✓
Ceramic plate	✓	✓	✓	✓	✓
Induction plate	✓	✓	✓	✓	✓
Electric solid top	✓	✓	✓	✓	✓
Pasta cooker	✓	✓	✓	✓	✓
Bain marie	✓	✓	✓	✓	✓
Gas fryer (simple or extreme)	✓	✓	✓	✓	✓
Electric fryer	✓	✓	✓	✓	✓
Griddle (gas or electric)	✓	✓	✓	✓	✓
Aqua grill	✓	✓	✓	✓	✓
Lava-stone grill	✓	✓	✓	✓	✓
Multi-function bratt pan	✓	✓	✓	✓	✓
Boiling pan	to be verified with Techincal Dept.				
Tilting bratt pan	to be verified with Techincal Dept.				

modular

modular

add & complete

	picture	model	Isola del Tesoro	Evolution	Bridge	Essential	Wall
accessories		Pot & Pan rack (steel or satin)	✓	✓	✓	✓	–
		Cantilever stand for Salamander	✓	✓	✓	✓	–
		Electrical socket	✓	✓	✓	✓	✓
		Water tap (with automatic drain)	✓	✓	✓	✓	✓
		Ladles rack built-in	✓	✓	✓	✓	✓
		Handrail	✓	✓	✓	✓	✓
	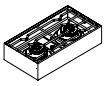	Burners (at the same level of the worktop)	✓	✓	✓	✓	✓
	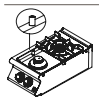	Kit for draining of liquid for burners	✓	✓	✓	✓	✓
cabinets		Cabinets H2 (standard)	✓	✓	✓	✓	✓
		Cabinets H3 (on request)	✓	✓	✓	✓	✓

step 4: sign

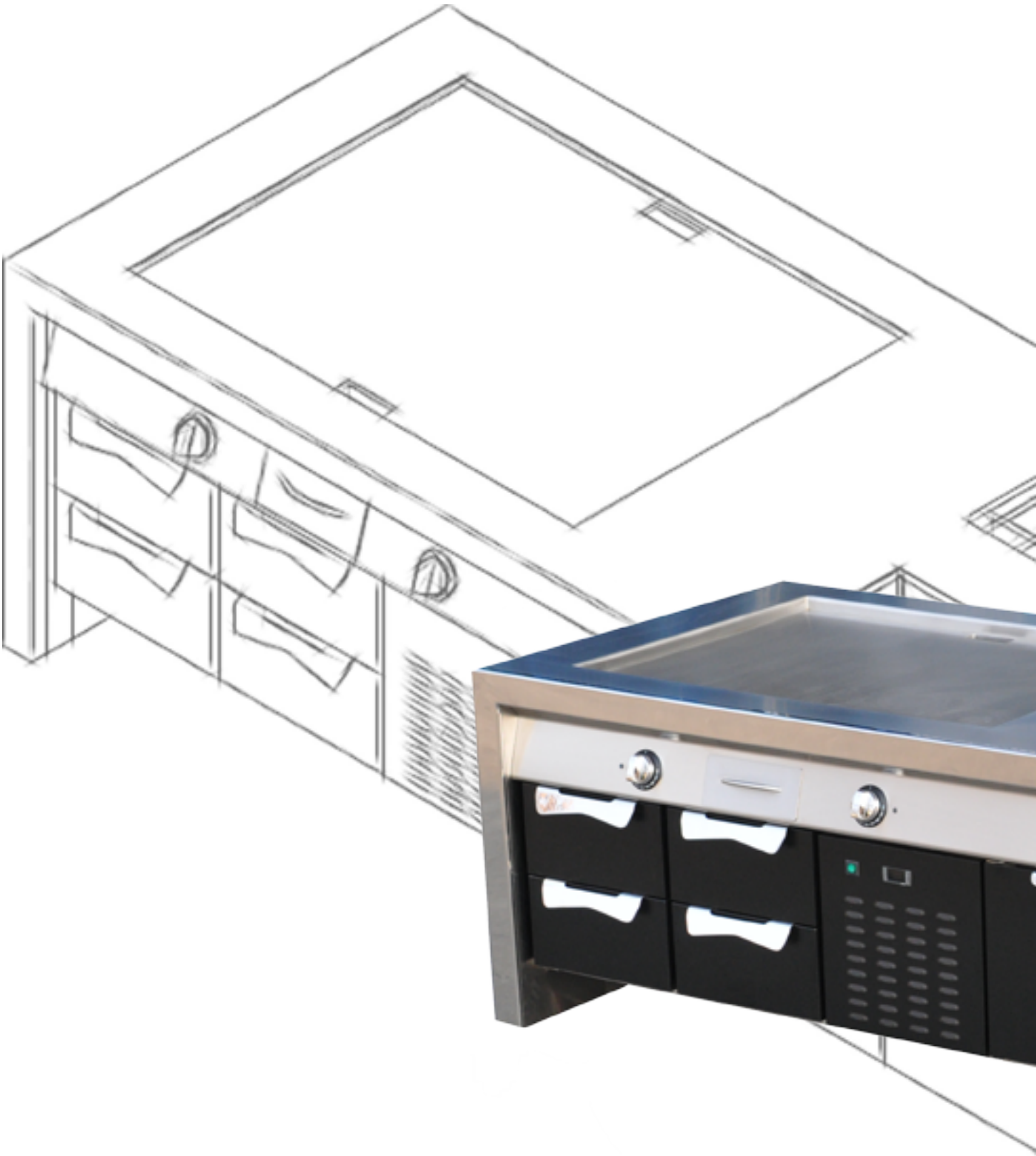

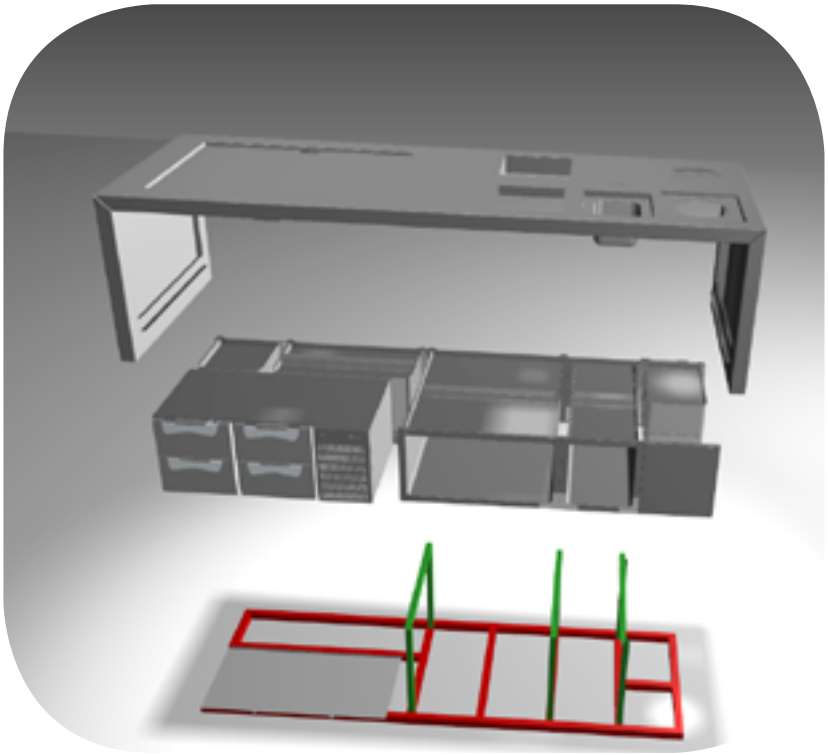

modular

Since 1986 Modular has been studying, designing and manu-facturing high level catering equipment for food services and hospitality industry. All products are made to satisfy the most demanding chefs, to ensure the efficiency and safety in compliance with the current international quality standards and supporting a low environmental impact. Quality, flexibility and innovation are our main characteristics.

modular

modular is
cooking
ovens
dishwashing
refrigeration
cooking islands
preparation
for professional
people

modular
emotion for professional people

modular professional s.r.l.
via palù, 93
31020 san vendemiano
treviso italy
ph. +39 0438 7714
fax +39 0438 778399
modular@modular.it

www.modular.it

2017 | concept and graphic design **wurbs.it** | printed in Italy